Current part is item (12) on diagram. Available at www.oshkoshequipment.com

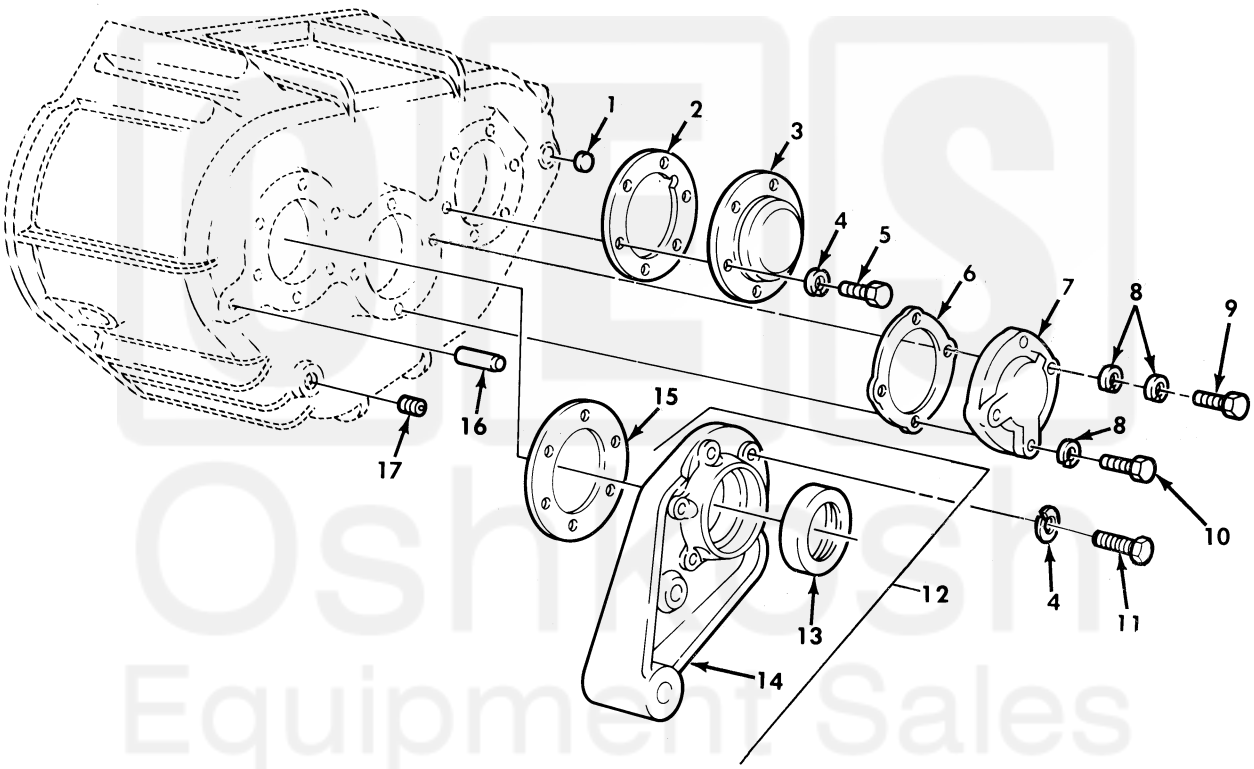

Figure 141. Transfer Case Covers, Cap, and Seal Assembly.

Current part is item (12) on diagram. Available at www.oshkoshequipment.com

Current part is item (12) on diagram. Available at www.oshkoshequipment.com

(1) ITEM NO	(2) SMR CODE	(3) NSN	(4) CAGEC	(5) PART NUMBER	(6) DESCRIPTION AND USABLE ON CODE (UOC)	(7) QTY
					GROUP 0801 POWER TRANSFER AND FINAL DRIVE ASSEMBLIES	
					FIG. 141 TRANSFER CASE COVERS,CAP, AND SEAL ASSEMBLY	
1	PAHZZ	5340-00-752-1372	19207	7521372	PLUG,EXPANSION.....	1
2	XDFZZ		19207	7375291	GASKET PART OF KIT P/N 7346775.....	1
3	PAFZZ	5340-00-734-6760	19207	7346760	COVER,ACCESS.....	1
4	PAFZZ	5310-00-209-0965	96906	MS35338-47	WASHER,LOCK.....	12
5	PAFZZ	5305-00-709-8283	96906	MS90727-84	SCREW,CAP,HEXAGON H.....	6
6	PAHZZ	5365-00-734-6751	19207	7346751	SHIM TRANSFER CASE.....	1
7	PAHZZ	3110-00-734-6759	19207	7346759	PLATE,RETAINING,BEA.....	1
8	PAHZZ	5310-00-584-5272	96906	MS35338-48	WASHER,LOCK.....	4
9	PAHZZ	5305-00-018-0178	24617	180178	SCREW,CAP,HEXAGON H.....	2
10	PAFZZ	5305-00-071-2072	80204	B1821BH050C225N	SCREW,CAP,HEXAGON H.....	2
11	PAFZZ	5305-00-071-1788	80204	B1821BH044C125N	SCREW,CAP,HEXAGON H.....	6
12	PAHZZ	2520-00-734-6757	19207	7346757	CAP,RETAINER.....	1
13	PAFZZ	5330-01-023-0269	19207	12470105	.SEAL,PLAIN ENCASED.....	1
14	PAFZZ	3130-01-162-3856	19207	8758288	.CAP,PILLOW BLOCK.....	1
15	PAHZZ	5365-00-563-5525	19207	7375297	SHIM.....	1
16	PAHZZ	5315-00-699-8460	19207	7521237	PIN,STRAIGHT,HEADLE.....	1
17	PAHZZ	4730-00-044-4655	30379	444655	PLUG,PIPE.....	1

END OF FIGURE

Current part is item (12) on diagram. Available at www.oshkoshequipment.com